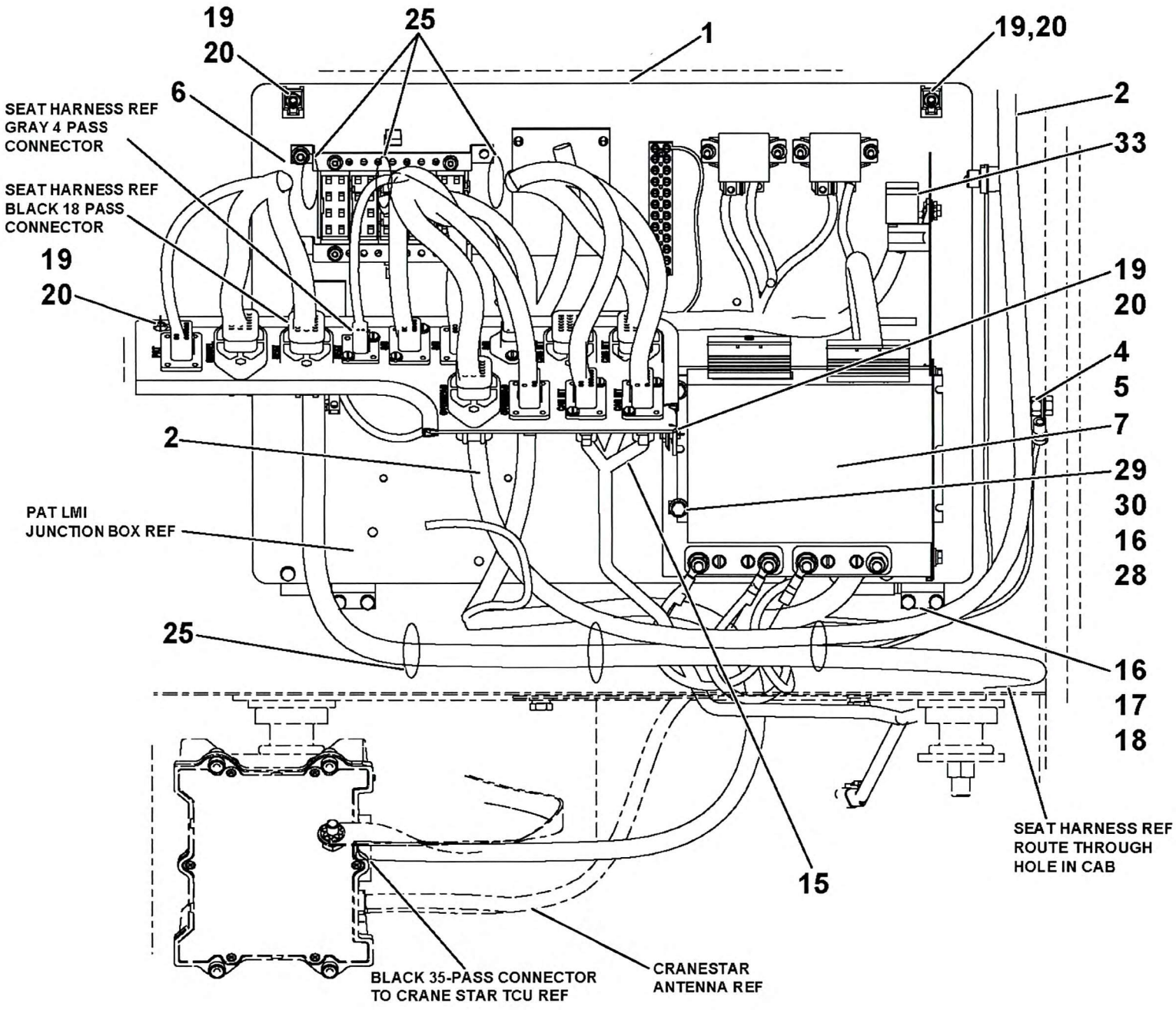

DETAIL-K
FUSE & RELAY PANEL

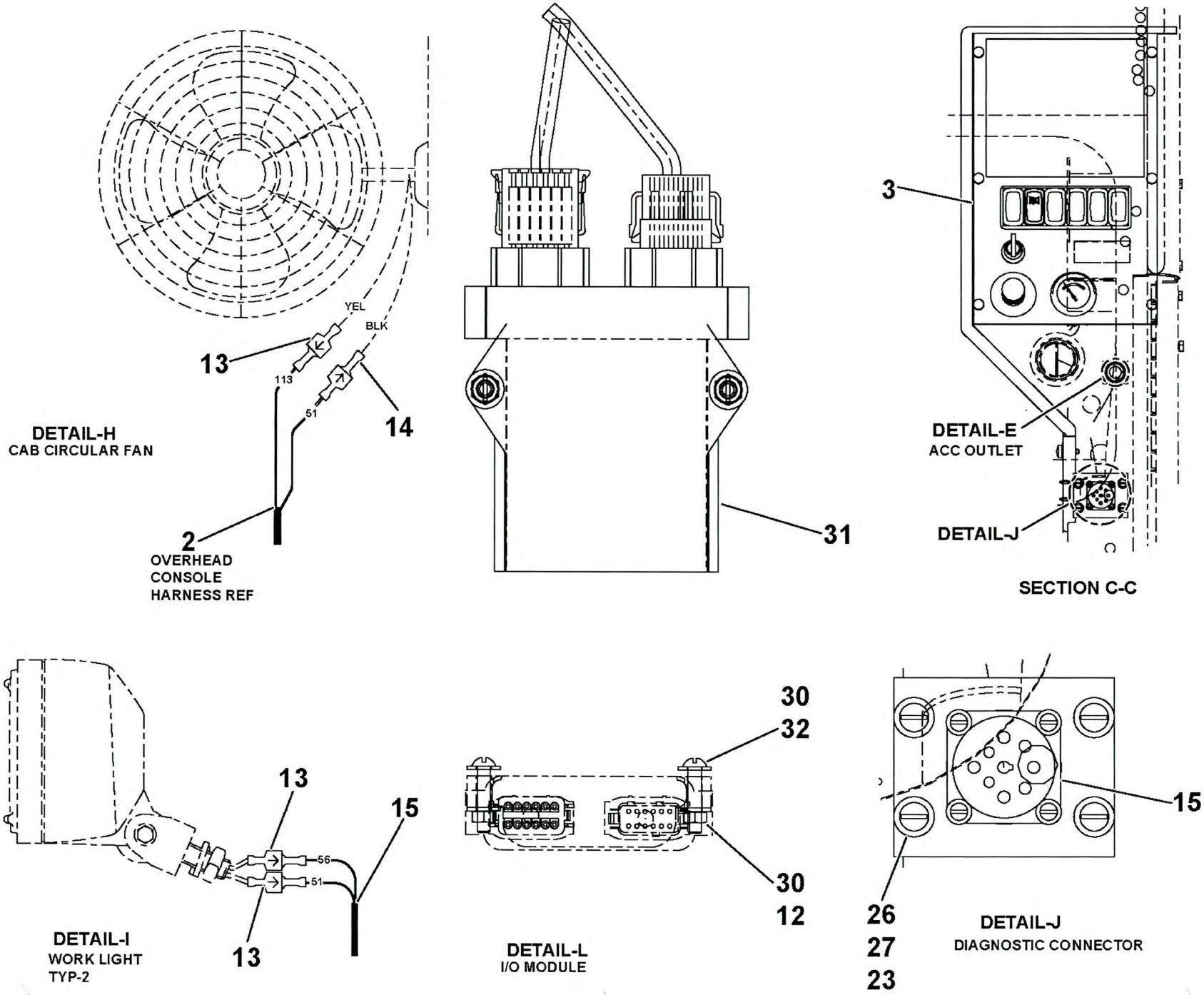
YEL
BLK
13
113
51
14
DETAIL-H
CAB CIRCULAR FAN
2
OVERHEAD
CONSOLE
HARNESS REF
31
3
DETAIL-E
ACC OUTLET
DETAIL-J
SECTION C-C
13
15
56
51
13
DETAIL-I
WORK LIGHT
TYP-2
30
32
30
12
DETAIL-L
I/O MODULE
15
26
27
23
DETAIL-J
DIAGNOSTIC CONNECTOR

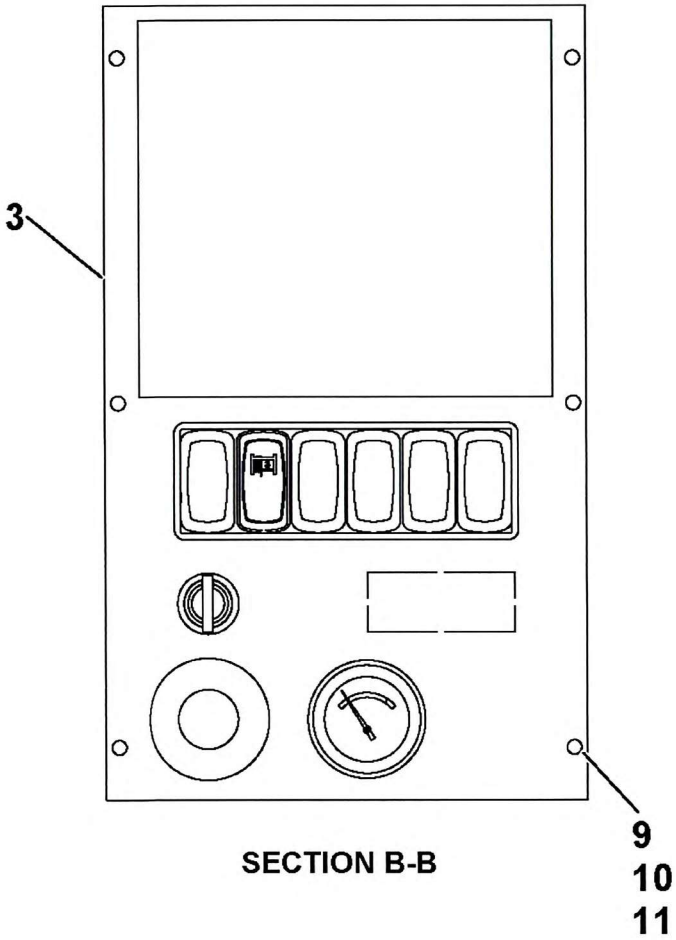

SECTION B-B

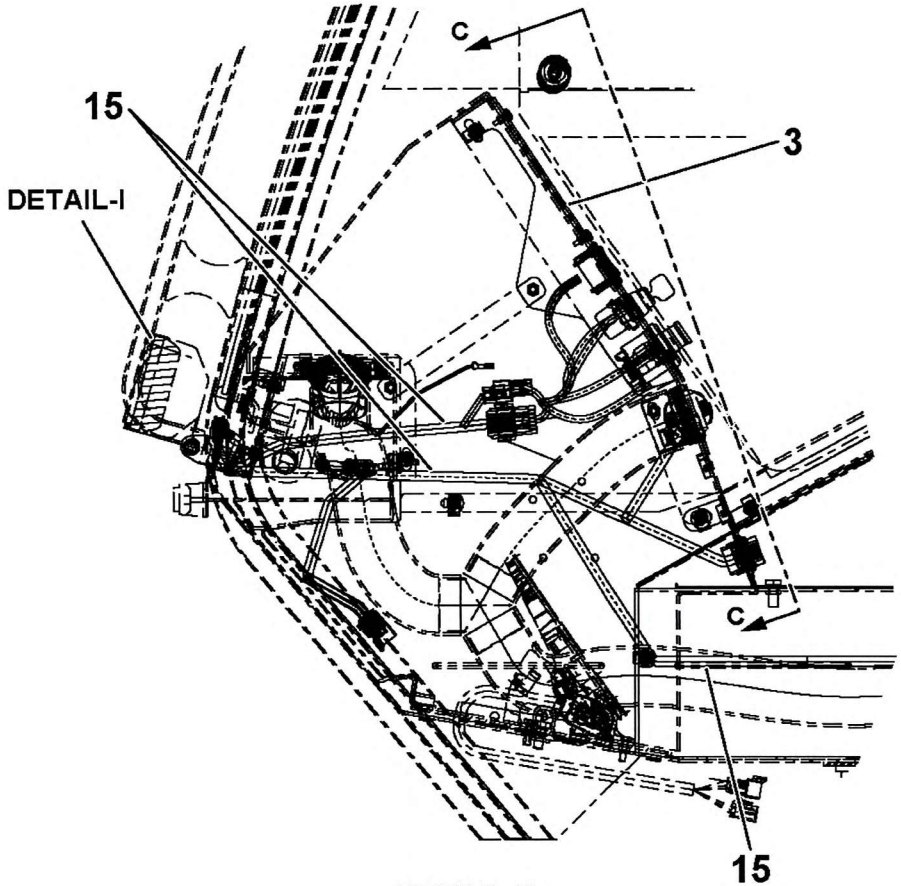

DETAIL-D
ACCELERATOR PEDAL

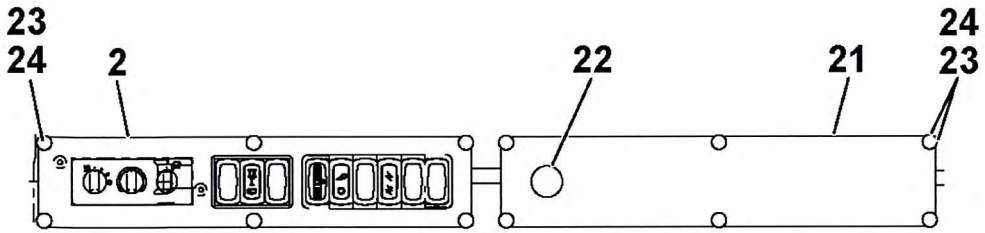

DETAIL-F
OVERHEAD CONSOLE

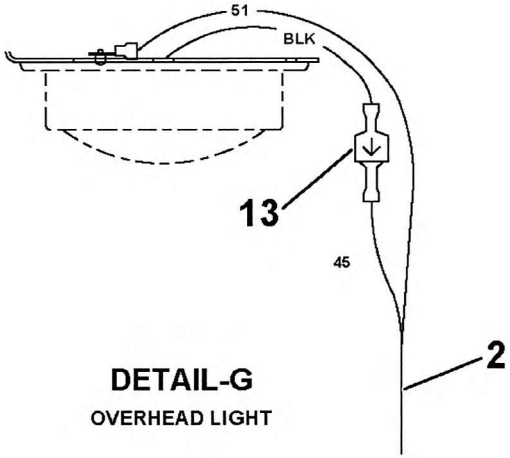

DETAIL-G
OVERHEAD LIGHT

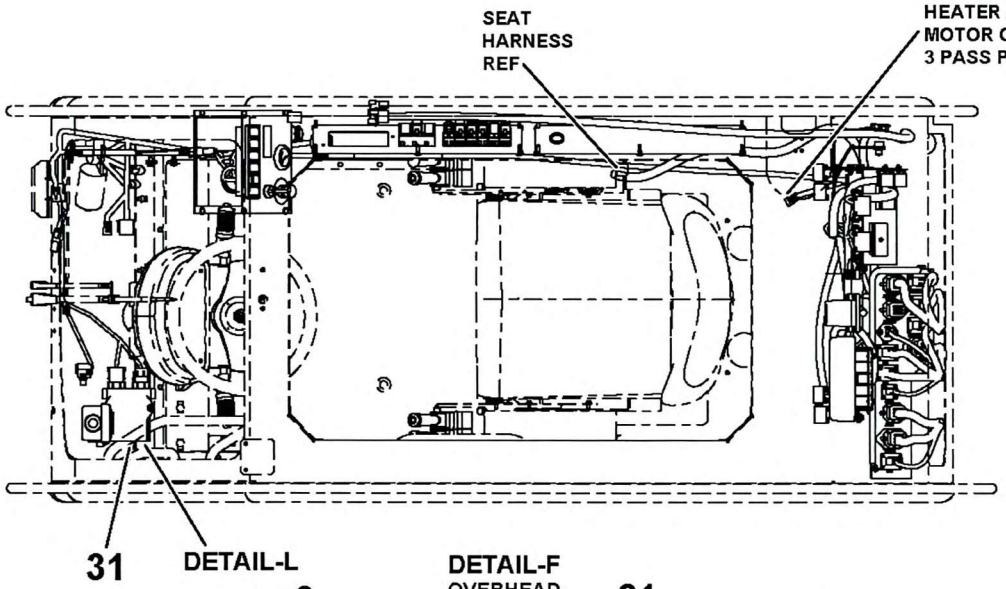

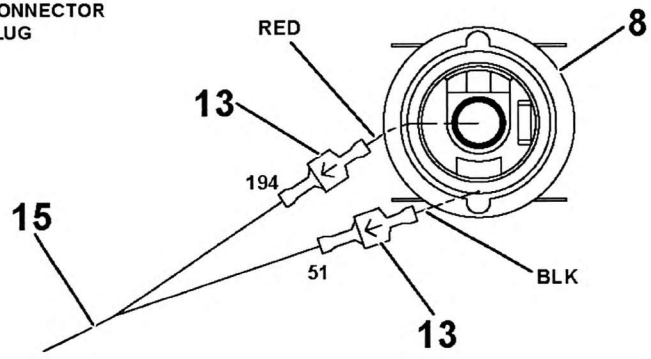
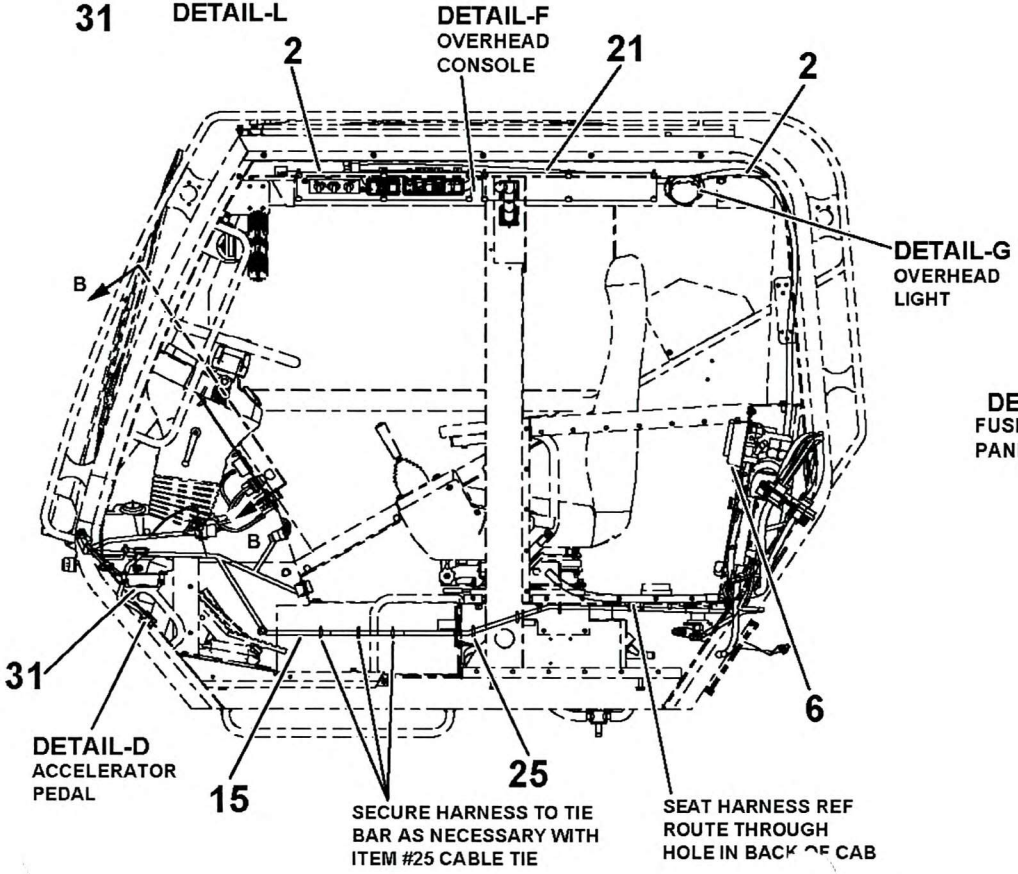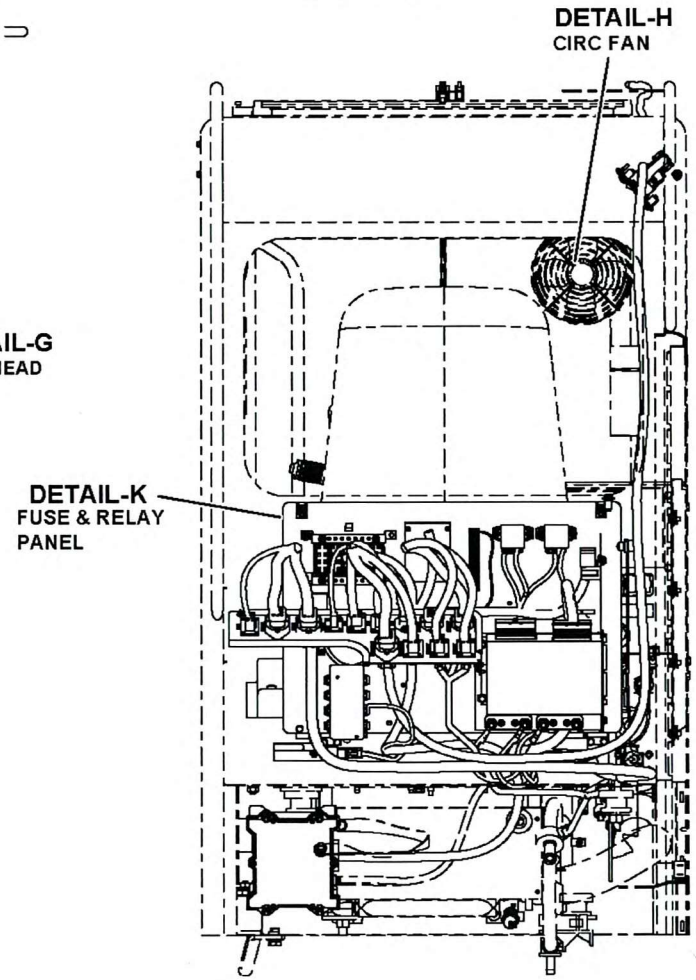
DETAIL-E
ACC OUTLET